CATAPULT MAINTENANCE ACTION

CATAPULT NO. _____ JSN _____ DATE _____

SHOT NO. _____ SHOTS SINCE LAST INSP. _____

RRE TRAVERSE CARRIAGE SLIPPER CLEARANCES

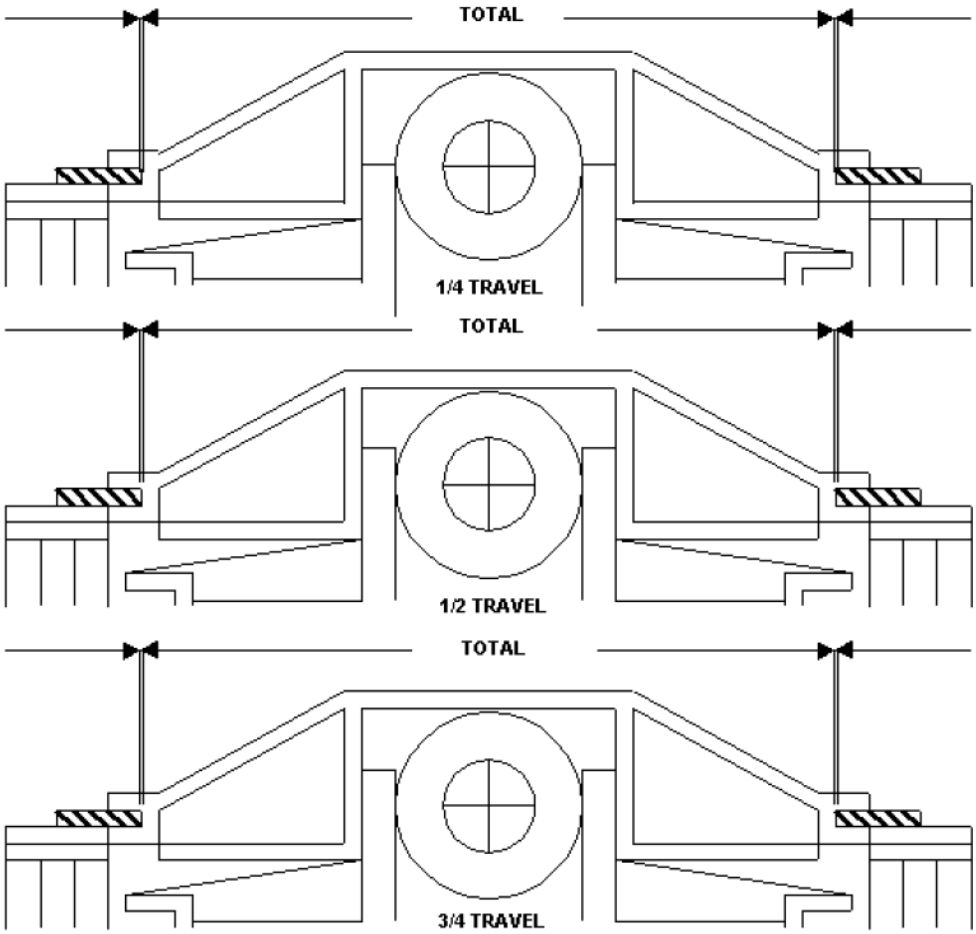

REMARKS

MAINT MAN _____ W/C SUPERVISOR _____

QA INSPECTOR _____ MAINT. CHIEF/OFFICER _____