ARRESTING GEAR MAINTENANCE ACTION

CATAPULT NO. _____ JSN _____ DATE _____

SHOT NO. _____ HITS SINCE LAST INSPECTION _____

ANCHOR DAMPER SLIPPER CLEARANCES

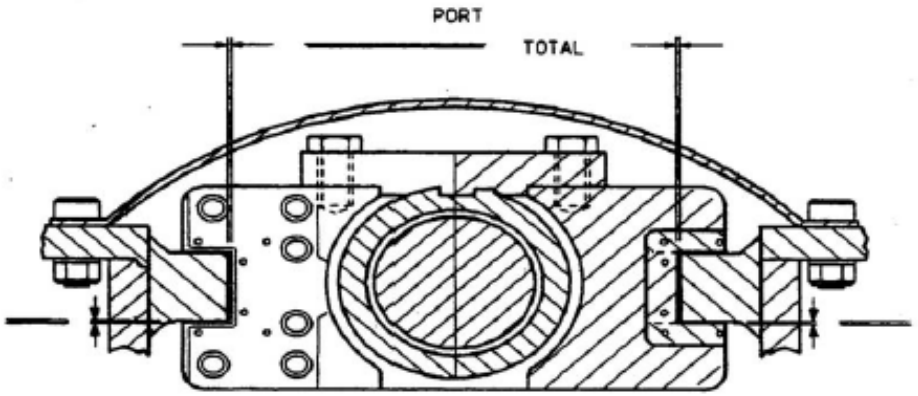

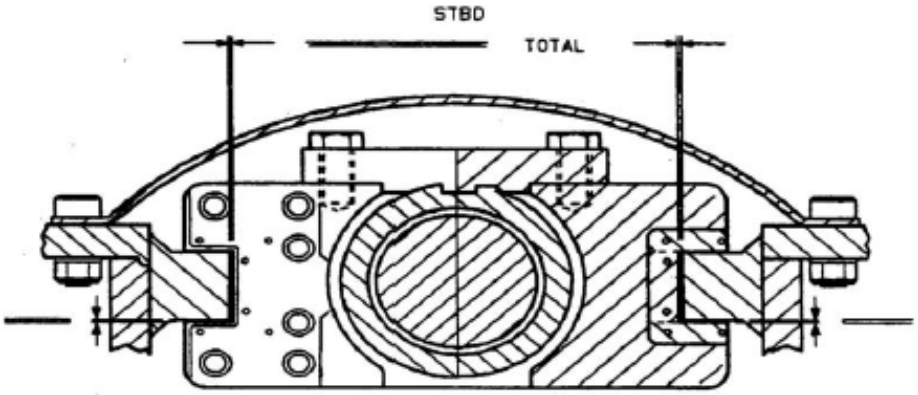

REMARKS:

MAINT. MAN _____ A/G LPO/CPO _____

QA INSPECTOR _____ MAINT. CHIEF/OFFICER _____